Opel2

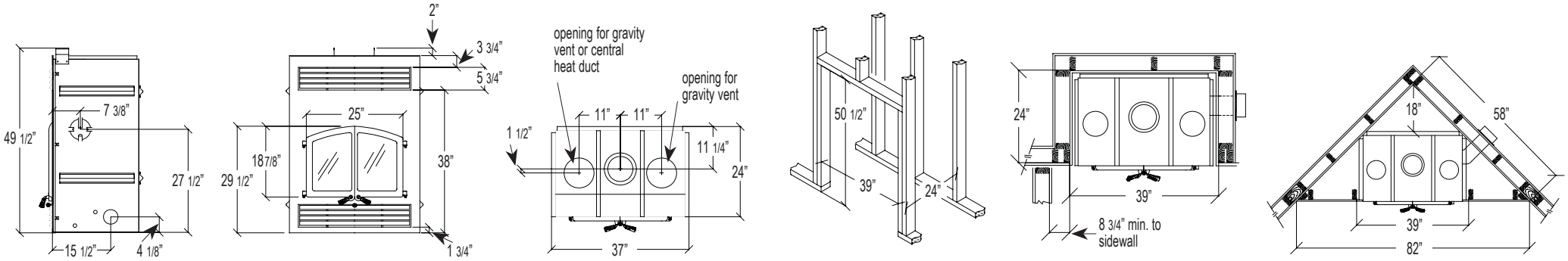

* All RSF fireplaces can be installed directly on the combustible materials of the framing; the fireplaces are all zero clearance. The suggested framing dimensions are larger than necessary to facilitate the installation of the fireplace.